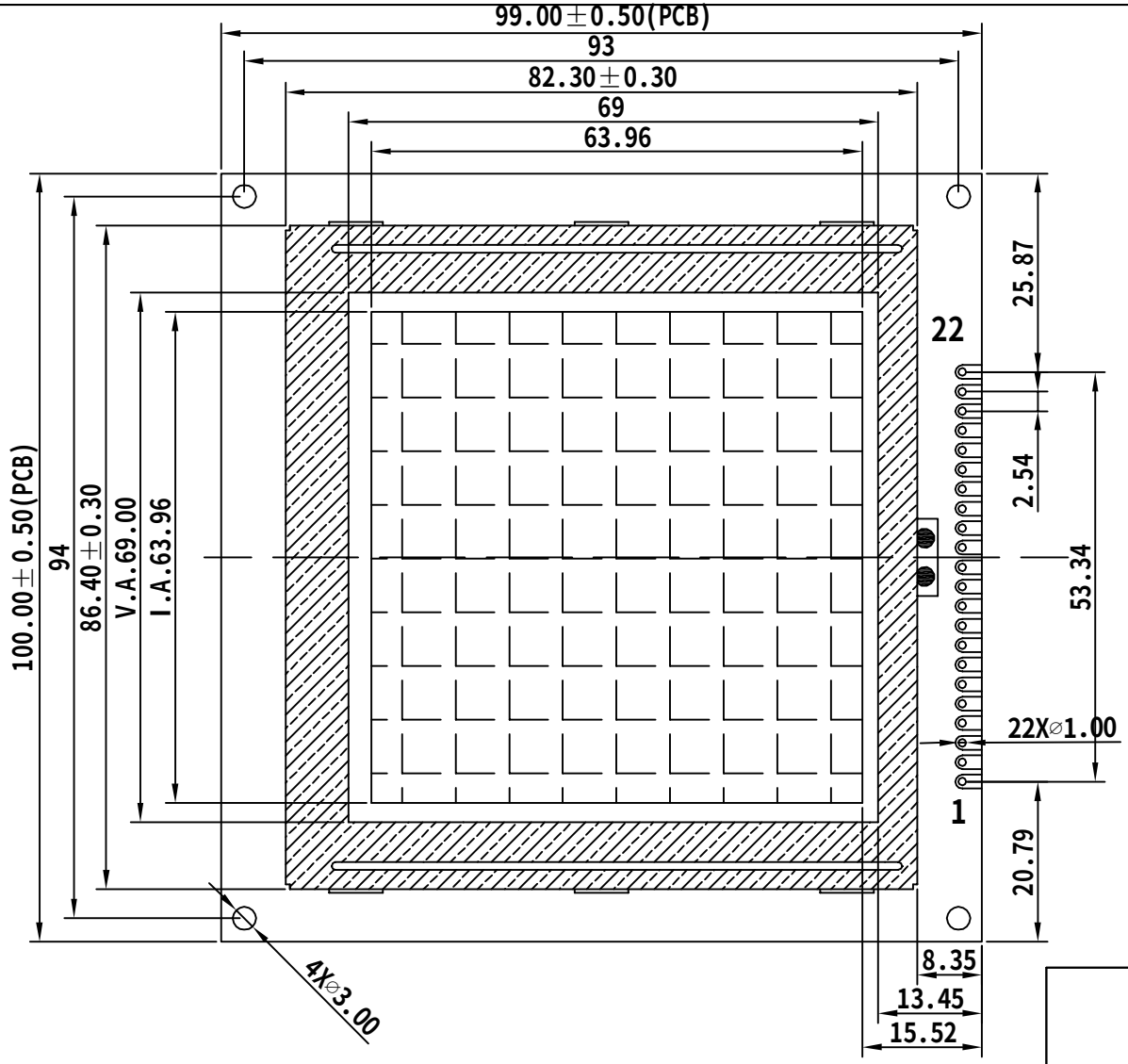


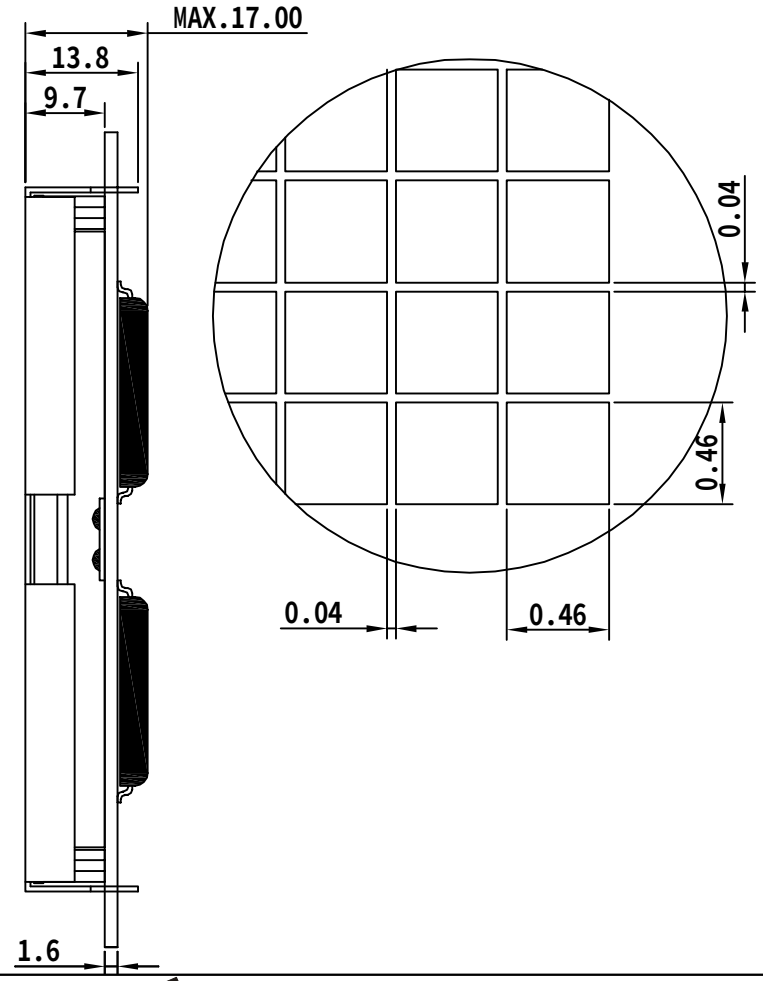


viewSHARP
锐显科技有限公司

| Pin Definition | | | | | | | | | | | | | LCM Mode | VS128128G | Control IC | T6963C |
|---|---|---|---|---|---|---|---|---|---|---|---|---|---|---|---|---|
| 1 | 2 | 3 | 4 | 5 | 6 | 7 | 8 | 9 | 10 | 11 | 12 | 13 | Dispaly Type | STN蓝/黄绿 | Viewing Direction | 6'CLOCK |
| FB | VREF | FG | VSS | VDD | VO | WR | RD | CE | CD | RST | FS | DB0 | Operating Voltage | | 3.3V or 5V | |
| 14 | 15 | 16 | 17 | 18 | 19 | 20 | 21 | 22 | | | | | Supply Current | | 20MA to 160MA | |
| DB1 | DB2 | DB3 | DB4 | DB5 | DB6 | DB7 | BL+ | BL- | | | | | Operating Temp | | -20°c to 70°c | |