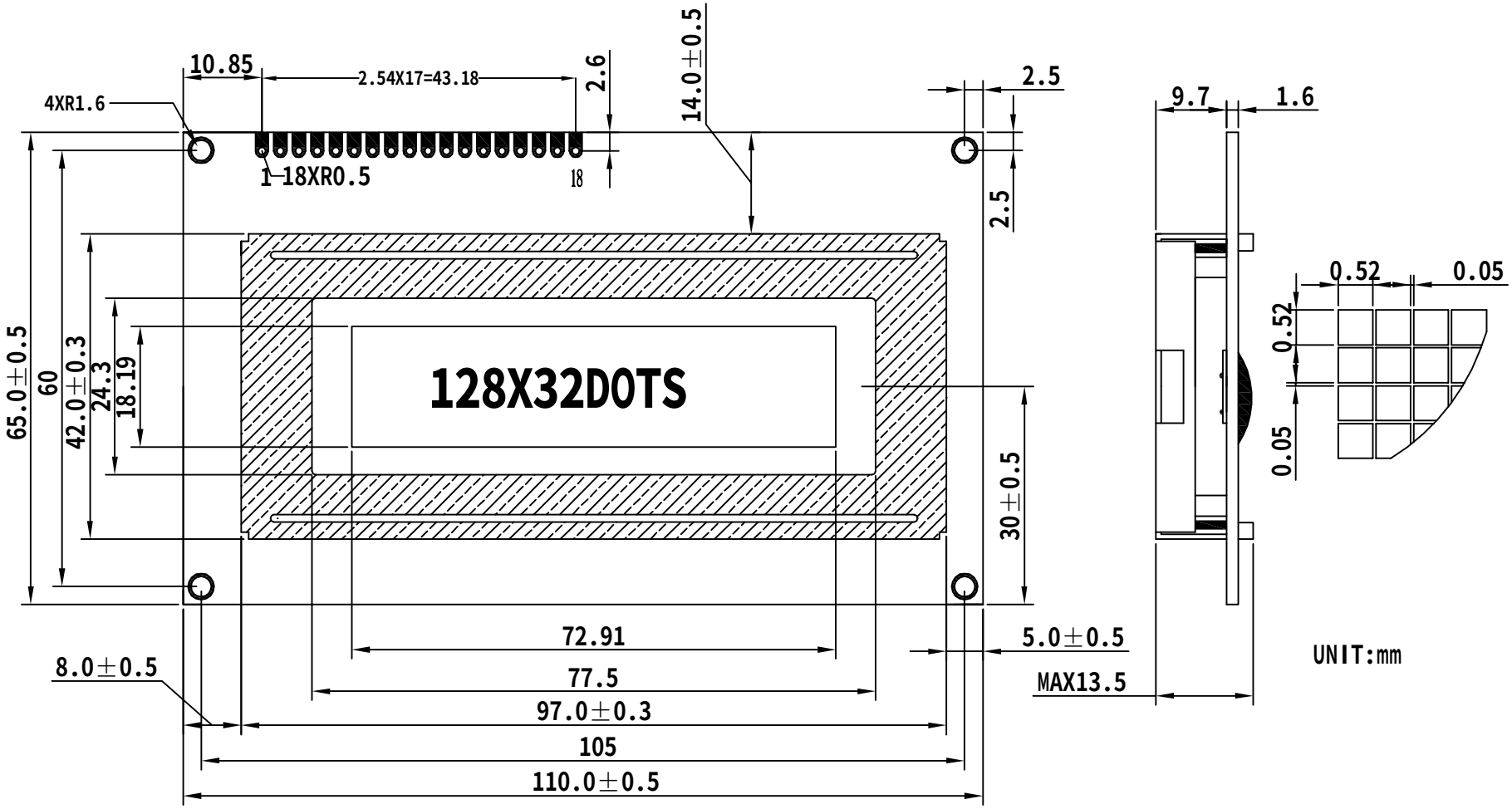

viewSHARP
锐显科技有限公司

Pin Definition													LCM Mode	VS12832G-1	Control IC	0107
1	2	3	4	5	6	7	8	9	10	11	12	13	Dispaly Type	STN蓝/黄绿	Viewing Direction	6'CLOCK
BL+	BL-	VO	VDD	VSS	E	RS	R/W	CS	RST	DB0	DB1	DB2	Operating Voltage		3.3V or 5V	
14	15	16	17	18									Supply Current		20MA to 80MA	
DB3	DB4	DB5	DB6	DB7									Operating Temp		-20°c to 70°c	