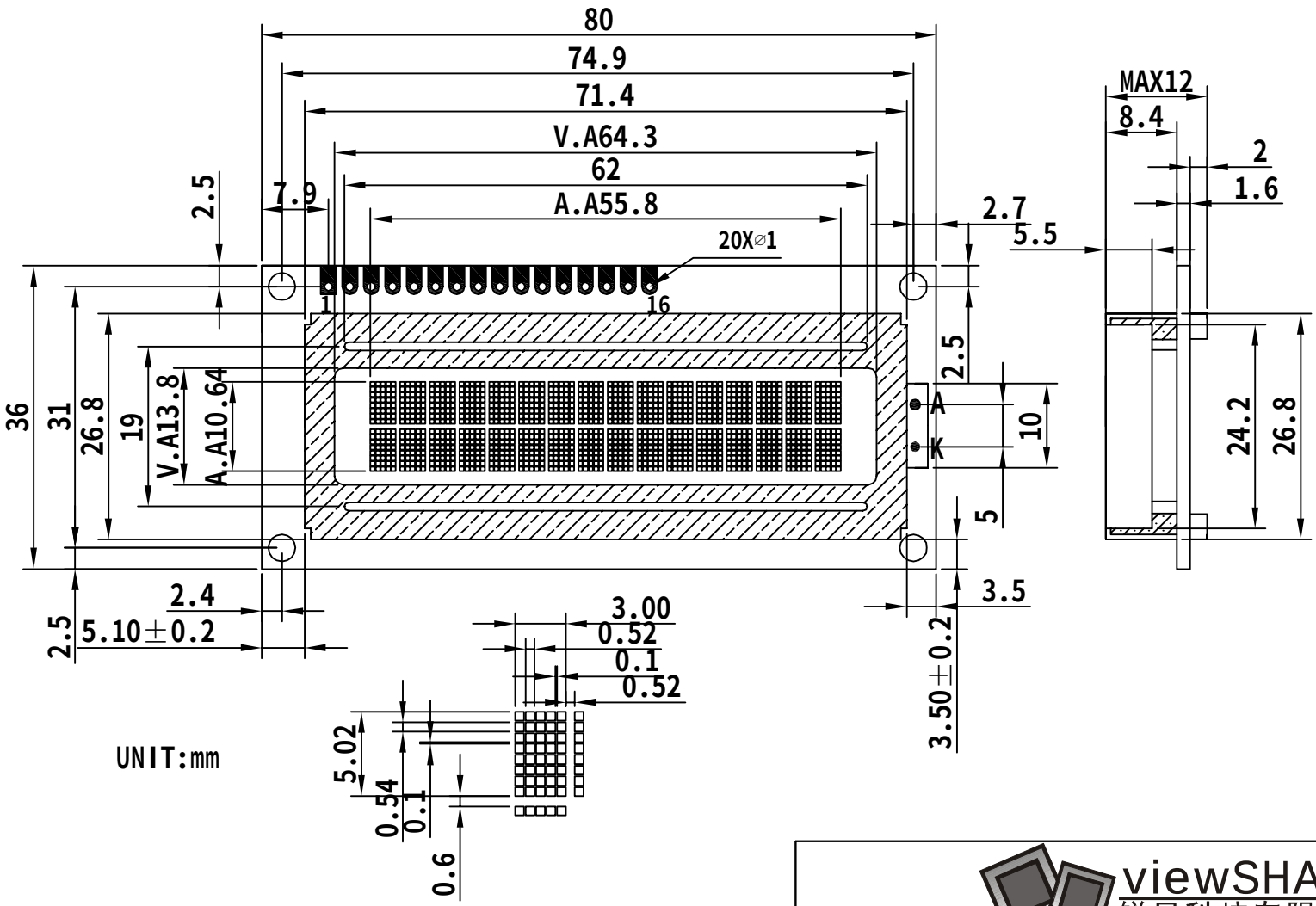

viewSHARP
锐显科技有限公司

Pin Definition													LCM Mode	VS1602	Control IC	0066
1	2	3	4	5	6	7	8	9	10	11	12	13	Dispaly Type	STN蓝/黄绿	Viewing Direction	6'CLOCK
VSS	VDD	VO	RS	R/W	E	DB0	DB1	DB2	DB3	DB4	DB5	DB6	Operating Voltage		3.3V or 5V	
14	15	16											Supply Current		15MA to 50MA	
DB7	BL+	BL-											Operating Temp		-20°c to 70°c	