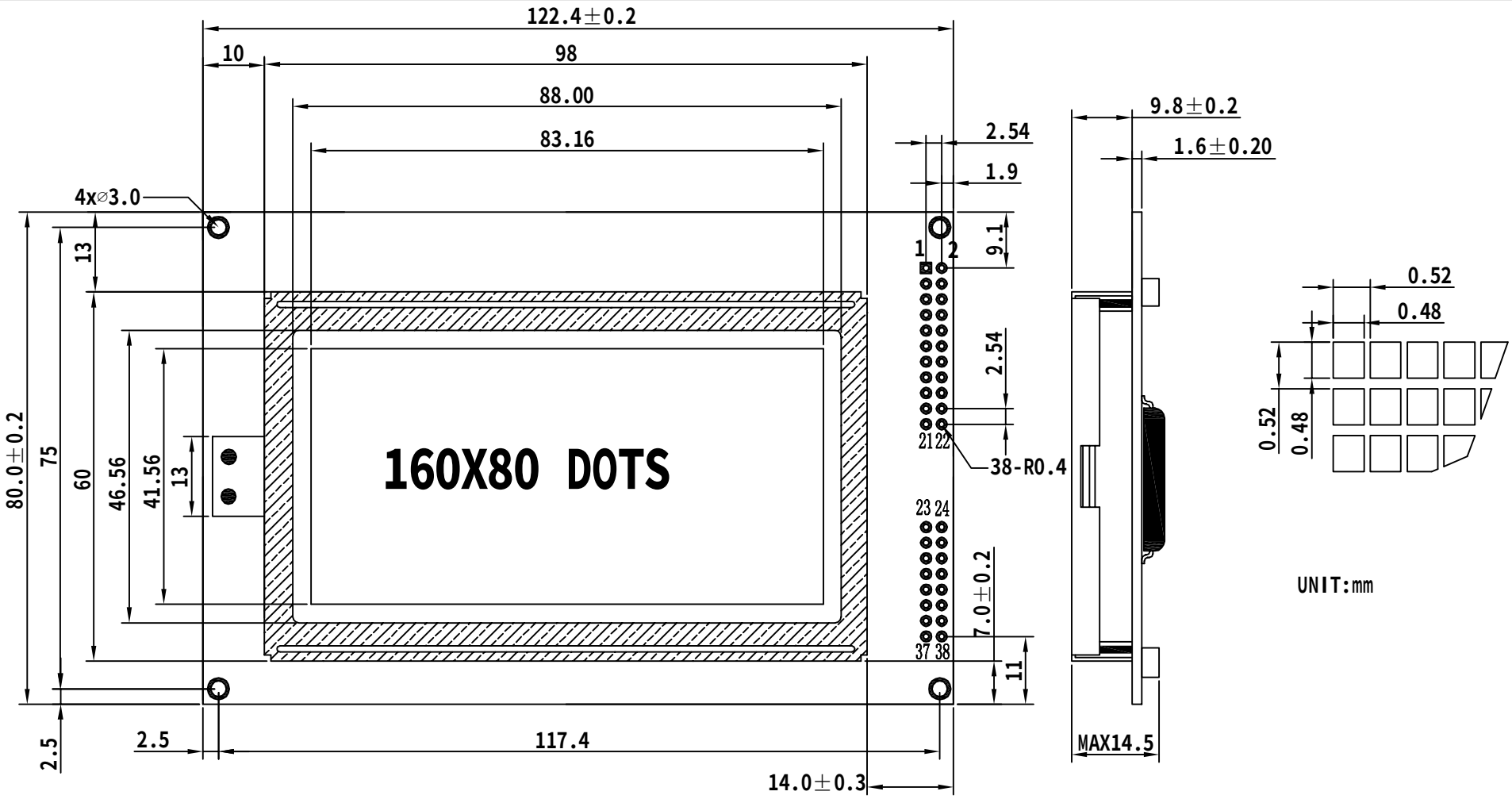

viewSHARP
锐显科技有限公司

Pin Definition													LCM Mode	VS16080D	Control IC	8803
1	2	3	4	5	6	7	8	9	10	11	12	13	Dispaly Type	STN蓝/黄绿	Viewing Direction	6'CLOCK
BL+	BL-	VSS	VDD	VO	BUSY	INT	CS1	CS2	RS	R/W	E	DB0	Operating Voltage		3.3V or 5V	
14	15	16	17	18	19	20	21	22					Supply Current		40MA to 200MA	
DB1	DB2	DB3	DB4	DB5	DB6	DB7	RST	VEE					Operating Temp		-20°c to 70°c	